Designed as a first section of multiple gear pumps group 43.

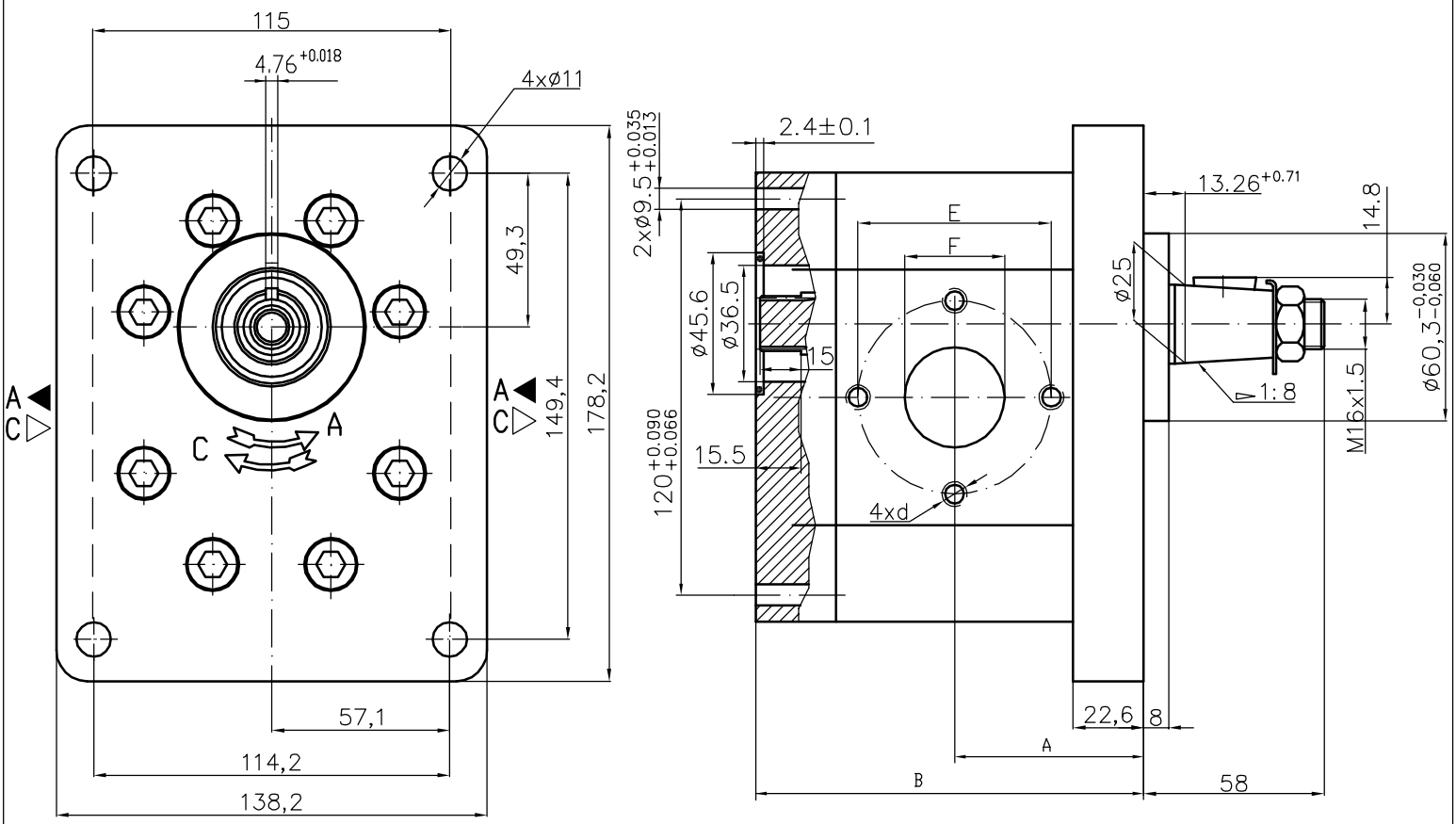

Type	Displacement	Flow		Pressure	max Speed	Dimension							
		at 1500 rpm	at max rpm	P_{nom}	n	A	B	Inlet			Outlet		
	cm^3/rev	l/min	l/min	bar	rpm	mm	mm	E	d	F	E	d	F
40A(C)36X471H	36	51,3	95,8	250	2800	68,0	138,5	62	3/8"-16UNC-2B	32	51	3/8"-16UNC-2B	27
40A(C)42X471H	42	59,9	99,8	230	2500	70,8	144,0						
40A(C)46X471H	46	65,6	100,5	230	2300	72,7	147,8						
40A(C)50X471H	50	71,3	99,8	200	2100	74,5	151,4						
40A(C)55X471H	55	78,4	91,4	200	1750	76,7	155,9						
40A(C)60X471H	60	85,5	99,8	180	1750	78,7	160,4						