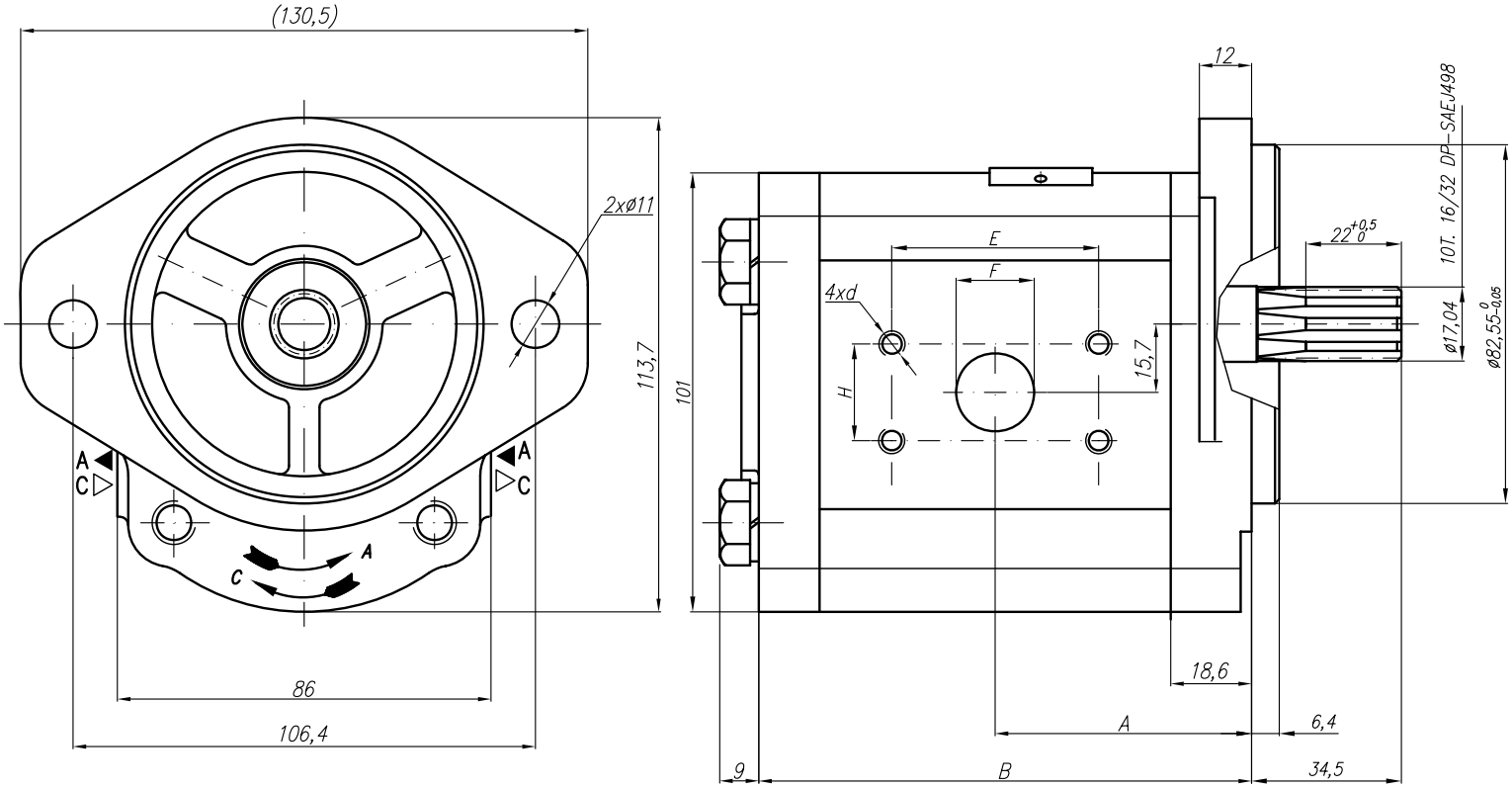


| Type | Displacement | Flow | | Pressure | max Speed | Dimension | | | | | | | | | | | |
|---|---|---|---|---|---|---|---|---|---|---|---|---|---|---|---|---|---|
| | | at 1500 rpm | at max rpm | $P_{nom}$ | n | A | B | Inlet | | | | | Outlet | | | | |
| | $cm^3$/rev | l/min | l/min | bar | rpm | mm | mm | E | H | d | | F | E | H | d | | F |
| 20A(C)15X464H | 15 | 20,48 | 47,78 | 250 | 3500 | 55,6 | 106,8 | 52,7 | 26,2 | 3/8"-14UNC-2B | | 25 | 47,6 | 22 | 3/8"-14UNC-2B | | 18 |
| 20A(C)16X464H | 16 | 22,08 | 51,52 | 250 | 3500 | 56,6 | 108,4 | | | | | | | | | | |
| 20A(C)17,3X464H | 17,3 | 23,87 | 55,71 | 230 | 3500 | 57,6 | 110,5 | | | | | | | | | | |
| 20A(C)18,2X464H | 18,2 | 25,39 | 59,24 | 210 | 3500 | 58,4 | 112,1 | | | | | | | | | | |
| 20A(C)19X464H | 19 | 26,51 | 61,85 | 200 | 3500 | 59 | 113,4 | | | | | | | | | | |
| 20A(C)22X464H | 22 | 31,02 | 72,38 | 180 | 3500 | 61,5 | 118,4 | | | | | | | | | | |
| 20A(C)25X464H | 25 | 35,63 | 83,13 | 160 | 3500 | 63,9 | 123,3 | | | | | | | | | | |
| 20A(C)28X464H | 28 | 40,32 | 67,20 | 130 | 2500 | 66,4 | 128,1 | | | | | | | | | | |
| 20A(C)32X464H | 32 | 46,08 | 76,80 | 120 | 2500 | 69,6 | 134,4 | | | | | | | | | | |
| 20A(C)36X464H | 36 | 51,84 | 86,40 | 100 | 2500 | 72,8 | 141 | | | | | | | | | | |